neoStat Series

Model: neoStat 12v v2

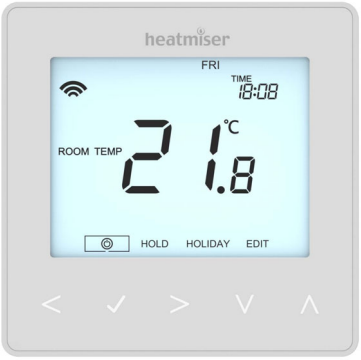

Temperature Range	5-35°C, 41-95°F
White Back Lit Screen	Y
Non-Programmable Mode	Y
5/2 Day Programming Mode	Y
7 Day Programming Mode	Y
24 Hour Mode	Y
Number of Heating Levels	4
Optimum Start	Y
Number of Switching Times (Timer mode)	4
Holiday Function	Y
Keylock Function	Y
Temperature Hold Function	Y
Temperature Override	Y
Temperature Override Limit	Y
Output Delay	Y

Frost Protection (7°C - 17°C)	Y
Mesh Networking Facility	Y
°C / °F Option	Y
Built In Air Sensor	Y
Remote Air Sensing Mode	Y
Floor Sensing Mode	Y
Remote Probe Included	N
Floor Temp Limit Protection	Y
Approach Sensor	Y
Max Switching Current	3A
Accuracy +/-	1°C
Adjustable Switching Differential	1°C - 3°C
Supply	**12v DC**
Installed Dimensions	**85x85x13mm (L,H,D)**
Weight	**129g**

Feature Table - Thermostat Mode

FEATURE	DESCRIPTION	SETTING
01	Pairing	Used to add zone to the neoHub
02	Switching Differential	00 = 0.5°C, 01 = 1.0°C (Default), 02 = 2.0°C, 03 = 3.0°C
03	Frost Protection Temperature	07° - 17°C (12°C = Default)
04	Output Delay	00 - 15 Minutes (00 = Default)
05	Up/Down Temperature Limit	00° - 10°C (00 = Default)
06	Sensor Selection	00 = Built in sensor, 01 = Remote Air Sensor Only, 02 = Floor Sensor Only, 03 = Built in & Floor Sensor, 04 = Remote Air & Floor Sensor (00 = Default)
07	Floor Temperature Limit	20° - 45°C (28°C = Default)
08	Optimum Start	00 - 05 Hours (00 = Default)
09	Rate of Change	Minutes to raise by 1°C
10	Not used on this model	
11	Not used on this model	
12	Program Mode	00= Non-Programmable, 01 = Weekday/Weekend (Default), 02 = 7 Day Programming, 03 = 24 Hour Mode
13	Temperature Format	00 = °C, 01 = °F (00 = Default)

Feature Table - Timer Mode

01	Pairing	Used to pair to the neoHub
02	Program Mode	01 = Weekday/Weekend (Default), 02 = 7 Day Programming, 03 = 24 Hour Mode

Product Dimensions (mm) & Wiring Specification

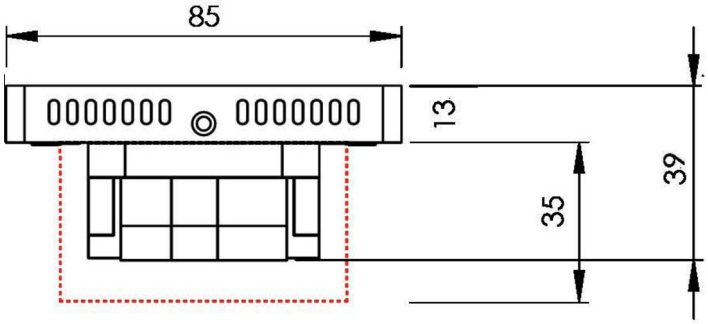

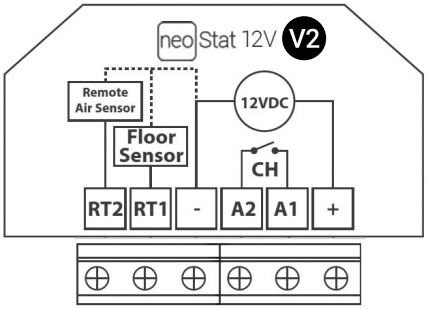

Wiring Detail

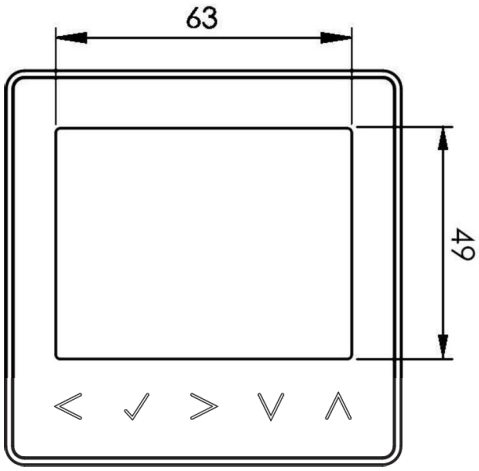

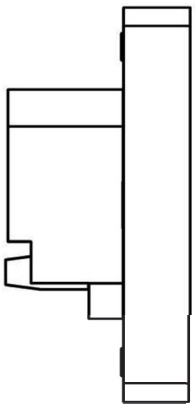

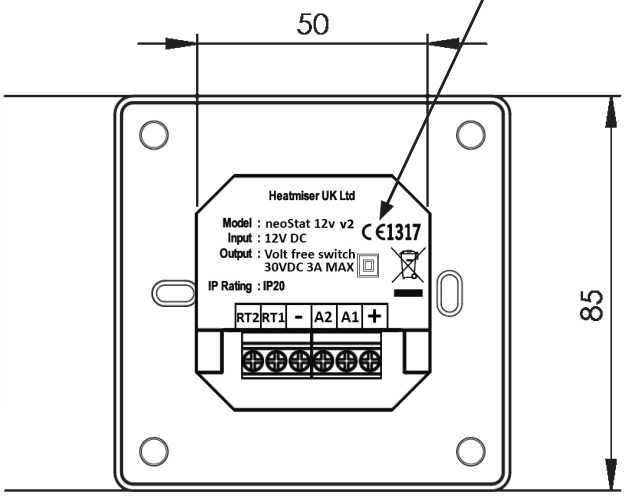

heatmiser

Heatmiser UK Ltd
1 - 5 Hurstwood Court, Mercer Way,
Shadsworth Business Park, Blackburn,
Lancashire. BB1 2QU, England
Registered in England: 3747773

tel. 01254 669090
fax. 01254 669091
email. sales@heatmiser.com
web. www.heatmiser.com
WEEE Registration Number: WEE/GF0052TQ